LET	ALTERATION	DATE	BY

LET	ALTERATION	DATE	
A	28F4065-2 & 28F4066-2 ADDED. NOTE 6 ADDED. -5 ADDED.		
B	ADDED -55 ASSEMBLY		
C	ADD NOTE 7: DWG. E.O. 14-2-2 ADDED. NOTE 1 WAS 8		
D	ON REV 2 PART 27: "DWG" PART WAS DWG. FWD. - BULKHEAD ATTACHED LOC. DWG. (PART 28 TO 28 (E.O. 5)) CHG. (REMOVING PLATES FWD PART OF BLKD. SEPARATE ON ATTACH).		
	ON NOT CHG.		
E	CHG. PORTION OF FWD. BULKHEAD & ADDED NOTE 6 (ADDED) TO -56 ASSY & ADDED "FWD." NOTE TO FWD.		
	ON NOT CHG.		
F	REVISED RELOTS / AIRP BLK. IN ASS. TO "CO2 HAND - 3 PLACES" ADDED CAC "E.O. 2" NOT CHG.		
G	ADDED NOTE "CO2 - 56 ASSY" & CREATE -56 ASSY. REVISED RELOTS THE AIRP BLK. NOT CHG.		
H	REMOVE FWD. PART OF DWG. & ADD C.A.C. 5.04-8 - WALTER KIDDE		
	ON NOT CHG.		
J	ADD NOTE 8 - 28F4080-4 & REF. (NO. MECHS.)		

K

P

R.D. "A641122

E.O. "A 74544 A
R.C.F. 131-2

E.O. 57206

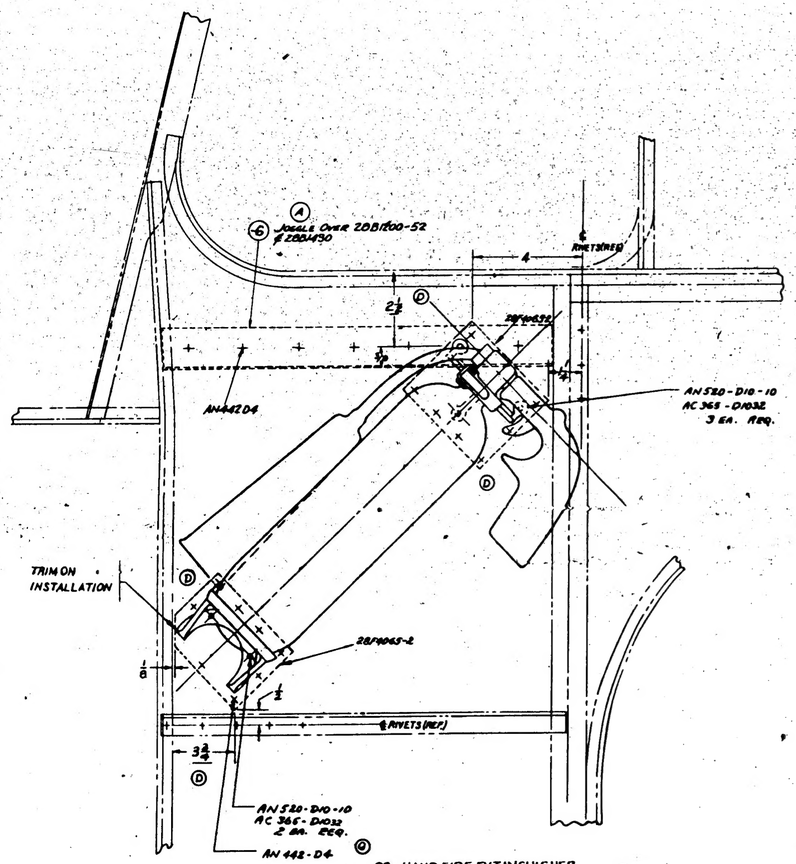

VIEW OF PORT SIDE LOOKING FORWARD

AT BLK'D. # 20

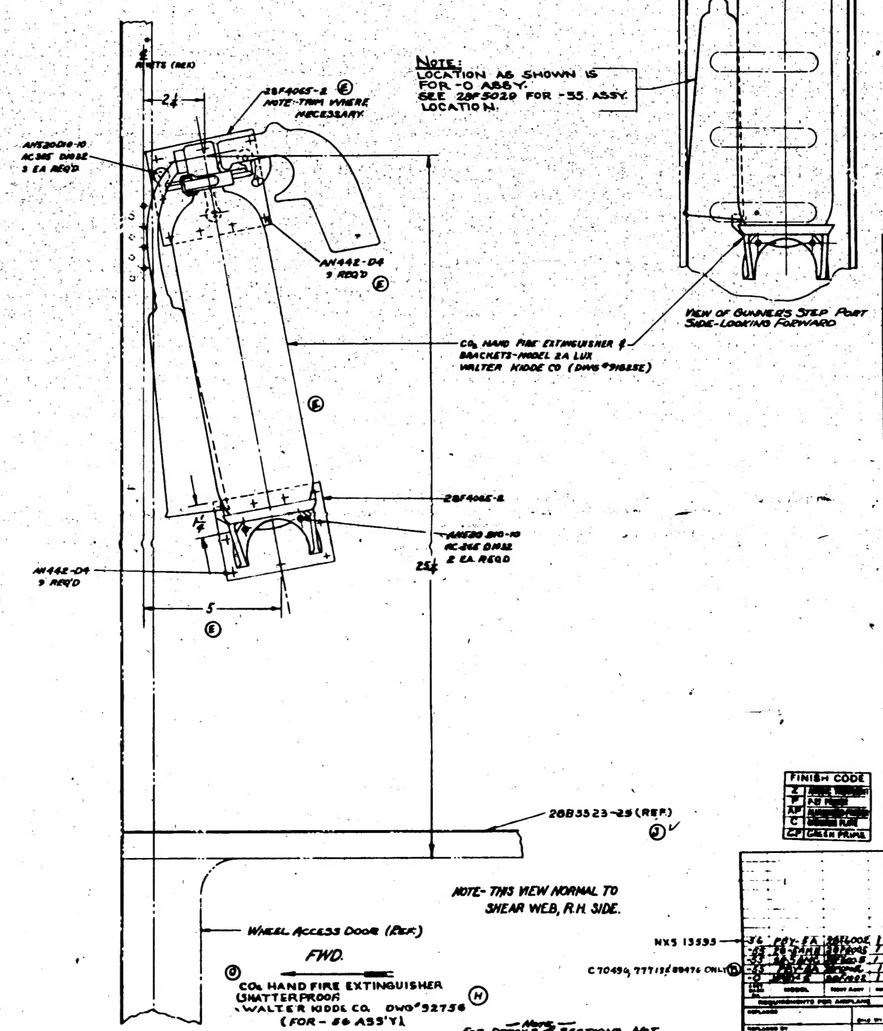

NOTE:
LOCATION AS SHOWN IS FOR -0 ASSY.
SEE 28F5029 FOR -55 ASSY. LOCATION.

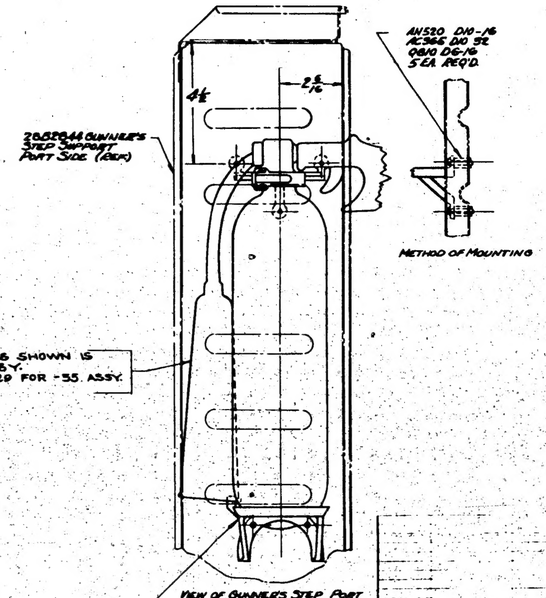

FINISH CODE	
Z	[illegible]
P	[illegible]
AP	[illegible]
C	[illegible]
CP	GREEN PRIME

NXS 13595

C 70496, 77713, 89476 ONLY

PART NO.	STOCK	MATERIAL	SPEC.
PARTS LIST PER ASSY.			

	-0	-55	-56	-6	-8
	REQ	REQ	REQ	REQ	REQ
CO2 HAND FIRE EXTINGUISHER CAC SET R-21 SHATTERPROOF (DWG. 92756)			1		
28F5029-2		1			
28F5029-0	1				
CO2 HAND FIRE EXTINGUISHER MODEL 2A LUX WALTER KIDDE CO. (DWG. 91625E) CAC SET 3	1	1	1	1	1
AC365-D1032	15	18	16		
AN442-D4	8				
AN520 D10-10	20	18	18		
AN520 D10-16		4			
D810 D6-16	5	4	4		
28F4065-2 & 28F4066-2 ALUMINUM ALLOY 2024-T3	1	1	1		
28F4080-4		2			

NAVY NAVAL	2P-GP-6 ONLY		
NEXT TO PART	FINISH	DRAFT	
NAME INSTALL.-FLGHT.-HAND FIRE EXTINGUISHER			
CONSOLIDATED AIRCRAFT CORP. San Diego Calif.		SIZE J	28F4154

H 312